毅永企業有限公司 E-YUNG ENTERPRISE CO., LTD.

REV	ZONE	REVISION	DATE

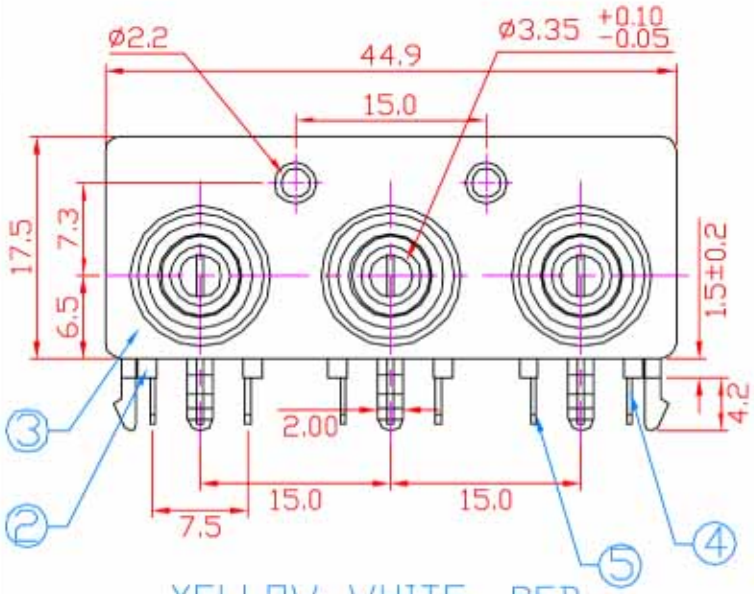

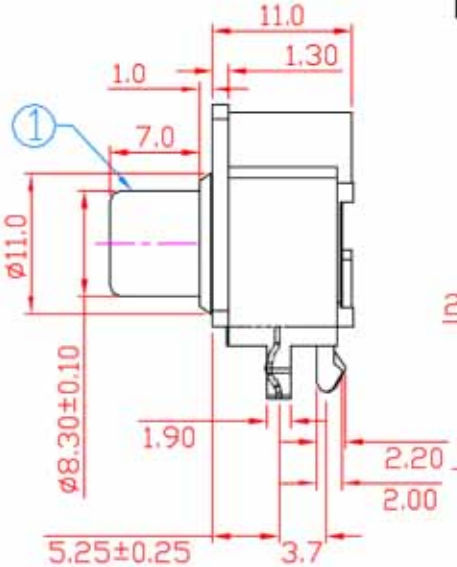

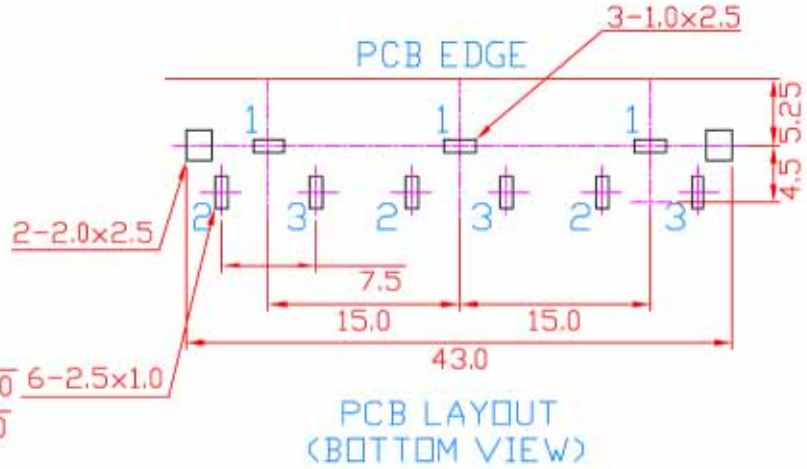

PCB LAYOUT
(BOTTOM VIEW)

YELLOW WHITE RED

INSERT RING COLORS

SCHEMATIC

NO.	NAME	MATERIAL	FINISH	Q'TY
1	BARREL	BRASS T:0.4	NICKEL PLATED	3
2	JACK HOUSING	PBT G.F.	YELLOW/WHITE/RED	3
3	ASSEM. HOUSING	ABS	BLACK	1
4	CONTACT TERM.	BRASS T:0.4	TIN PLATED	3
5	CONTACT TERM.	PHOS. BRONZE T:0.3	TIN PLATED	3

Specification:

Contact Resistance: 30m Ohm. Max. At AC 100mA Max 1KHz

Insulation Resistance: 100M Ohm Min. At 500V DC.

Rated Voltage And Current: DC 12V,2A Max ; AC 100V,1A Max

Dielectric Withstanding Voltage: 500VAC At 60Hz For 1 Minute

Durability (Life Test): 4000 Cycles

Insertion Force: 0.3~3.0 Kg

Extraction Force: 0.3~3.0Kg