REV	ZONE	REVISION	DATE

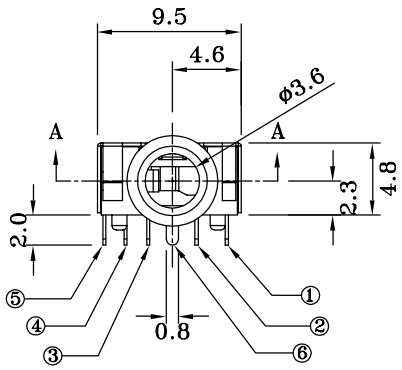

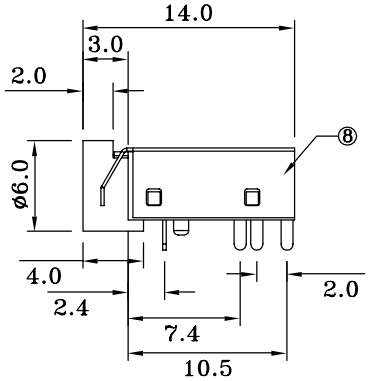

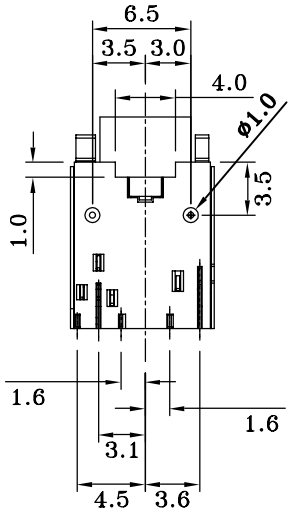

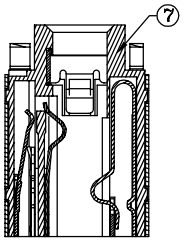

SECTION A-A

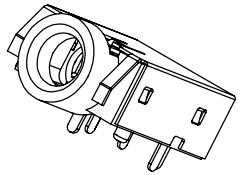

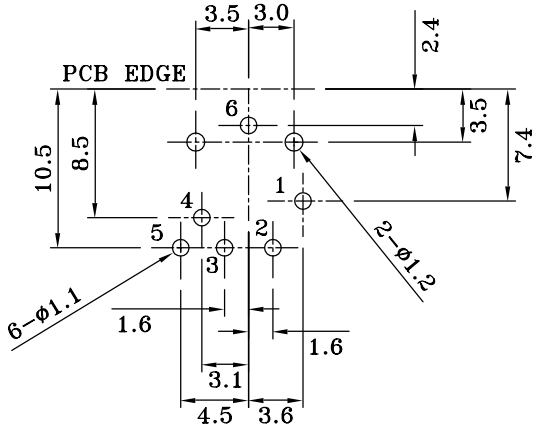

PCB LAYOUT
(BOTTOM VIEW)

SCHEMATIC

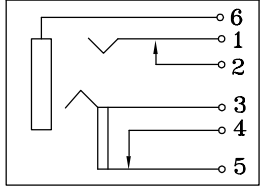

NO.	PJ-2503-6S	PJ-2503P_-6S(PC99 COLOR)				
		A	B	C	D	E
COLOR	BLACK	PINK	LIGHT BLUE	LIME	YELLOW	ORANGE
PANTONE		701C	284C	577C	123C	157C

NO.	NAME	MATERIAL	FINISH
1	PIN1	PBS T:0.25	TIN PLATED
2	PIN2	BRASS T:0.25	TIN PLATED
3	PIN3	PBS T:0.20	TIN PLATED
4	PIN4	PBS T:0.20	TIN PLATED
5	PIN5	PBS T:0.20	TIN PLATED
6	PIN6	PBS T:0.25	TIN PLATED
7	HOUSING	NYLON PA9T G.F.	
8	SHELL	PBS T:0.2	NICKEL PLATED

E-YUNG

E-YUNG ENTERPRISE CO., LTD.

COMPUTER NO.	UNIT	SCALE	PART NAME
D:\DWG\PJ-2503-6S	mm	2:1	3.5ø PHONE JACK

APPD.	CKD.	DWG.	DATE	TOLERANCE	PART NO.	REV.
		TINA	22-03-04	±0.3		A

MODEL	PJ-2503-6S	PAGE 1 OF 1