毅永企業有限公司 E-YUNG ENTERPRISE CO., LTD.

REV	ZONE	REVISION	DATE

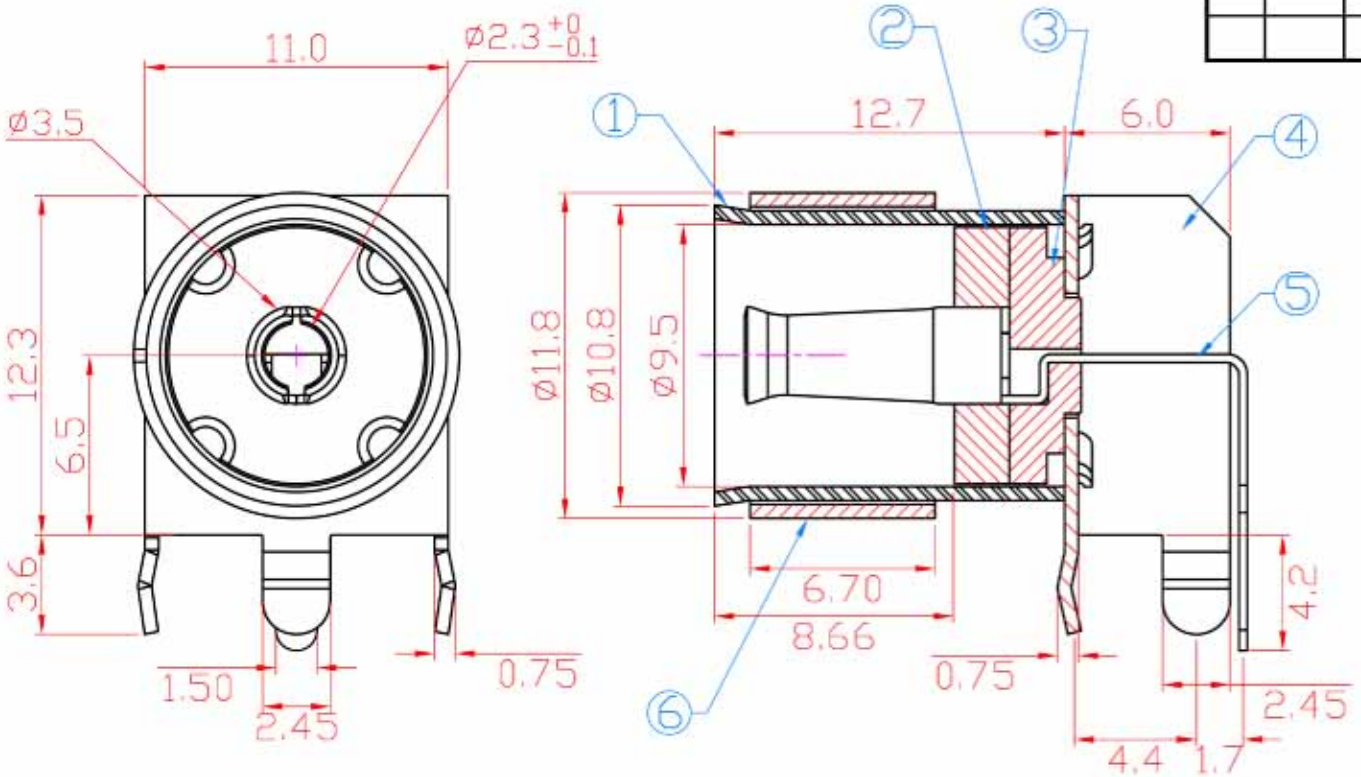

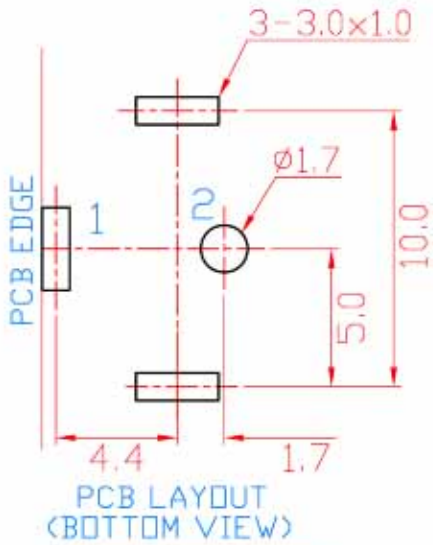

SCHEMATIC

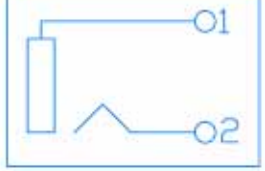

NO.	NAME	MATERIAL	FINISH	Q'TY
1	BARREL	C.R.S T:0.50	NICKEL PLATED	1
2	FRONT RING	PBT G.F.	WHITE	1
3	BACK RING	PBT G.F.	WHITE	1
4	FRAME	C.R.S T:0.50	TIN PLATED	1
5	CENTER PIN	PHOS.BRONZE T:0.30	TIN PLATED	1
6	CLIP	C.R.S T:0.50	NICKEL PLATED	1

Specification:

Contact Resistance: 50m Ohm Max.
Insulation Resistance: 500M Ohm Min. At 500V DC.
Dielectric Withstanding Voltage: 500VAC For 1 Minute.
Insertion Force:4.0Kg±2Kg.
Extraction Force: 4.0Kg±2Kg.