毅永企業有限公司 E-YUNG ENTERPRISE CO.,LTD.

REV	ZONE	REVISION	DATE

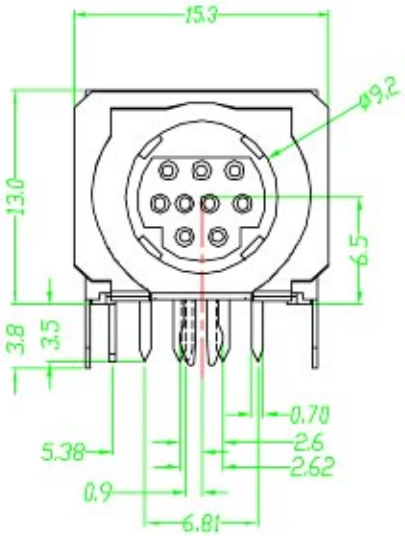

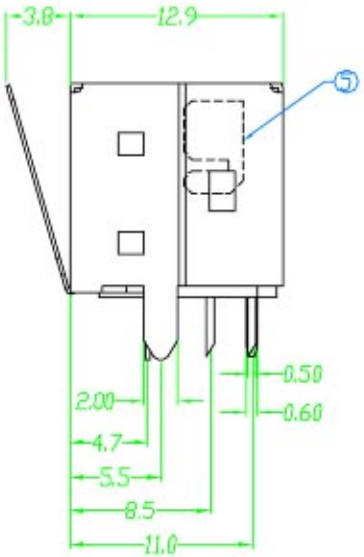

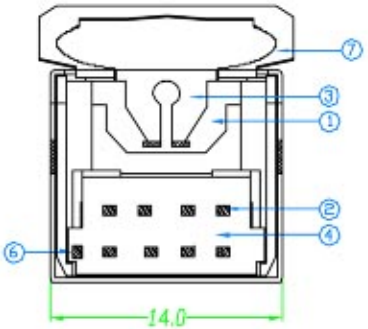

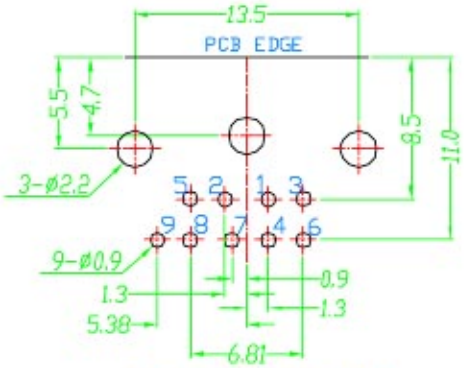

P.C.B. RECOMMEND LAYOUT
BOTTOM VIEW

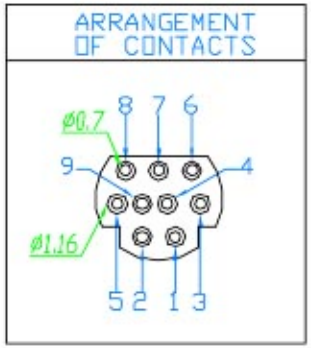

Specification:

Contact Resistance: 30m Ohm Max.
Insulation Resistance: 100M Ohm Min.AT 500V DC
Rated Voltage And Current: DC12V.2A Max;AC 100V.1A Max
Dielectric Withstanding Voltage: 250V AC For 1 Minute
Durability (Life Test): 100 Cycles
Insertion Force: 4.0KG Maximum.
Extraction Force: 0.9KG Minimum.

NO.	NAME	MATERIAL	FINISH	Q'TY
1	HOUSING	PBT G.F.	BLACK	1
2	CONTACT	PHOS. BRONZE T:0.2	Gold:1~3u"; Ni:40~60u"; TIN:120u" (100% pure Tin of lead free plating)	8
3	SHIELD	BRASS T:0.3	TIN PLATED Sn:120-200u"	1
4	BOTTOM COVER	PBT G.F.	BLACK	1
5	COLLOIDAL PARTICLE	P.E.	WHITE	1
6	CONTACT	PHOS. BRONZE T:0.4	Gold:1~3u"; Ni:40~60u"; IN:120u" (100% pure Tin of lead free plating)	1
7	SPRING SHIELD	STAINLESS T:0.2		1