毅永企業有限公司 E-YUNG ENTERPRISE CO.,LTD.

REV	ZONE	REVISION	DATE

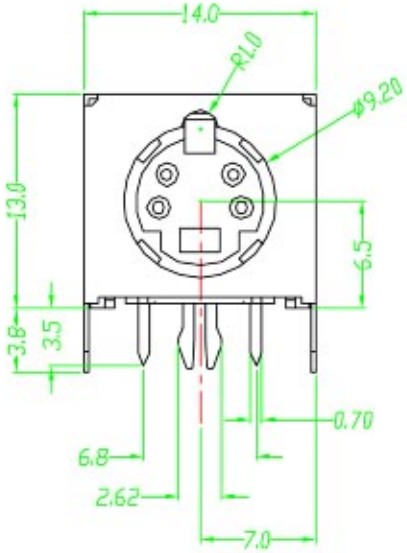

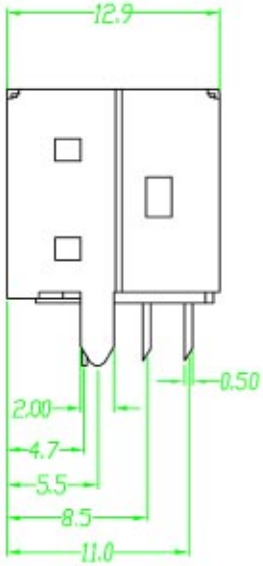

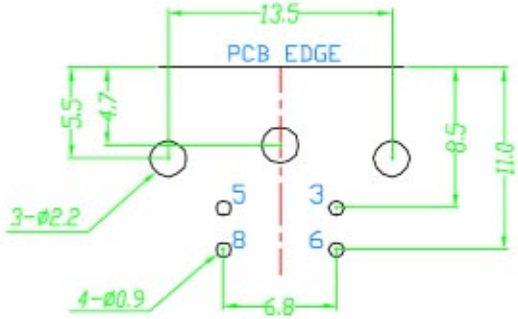

PCB LAYOUT
(BOTTOM VIEW)

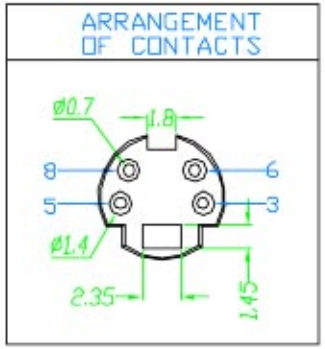

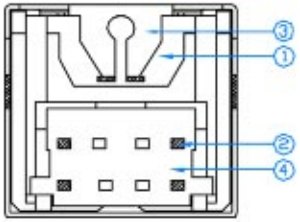

Specification:

Contact Resistance: 30m Ohm Max.

Insulation Resistance: 100M Ohm Min.AT 500V DC

Rated Voltage And Current: DC12V.2A Max;AC 100V.1A Max

Dielectric Withstanding Voltage: 250V AC For 1 Minute

Durability (Life Test): 100 Cycles

Insertion Force: 4.0KG Maximum.

Extraction Force: 0.9KG Minimum.

NO.	NAME	MATERIAL	FINISH	Q'TY
1	HOUSING	PBT G.F.	BLACK	1
2	CONTACT	PHOS. BRONZE T:0.2	Gold:1~3u"; NI:40~60u"; TIN:120u" (100% pure Tin of lead free plating)	4
3	SHIELD	BRASS T:0.3	TIN PLATED Sn:120~200u"	1
4	BOTTOM COVER	PBT G.F.	BLACK	1