RoHS Compliance

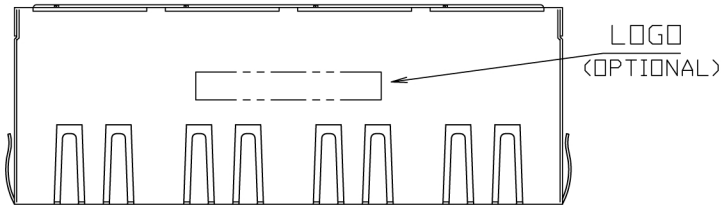


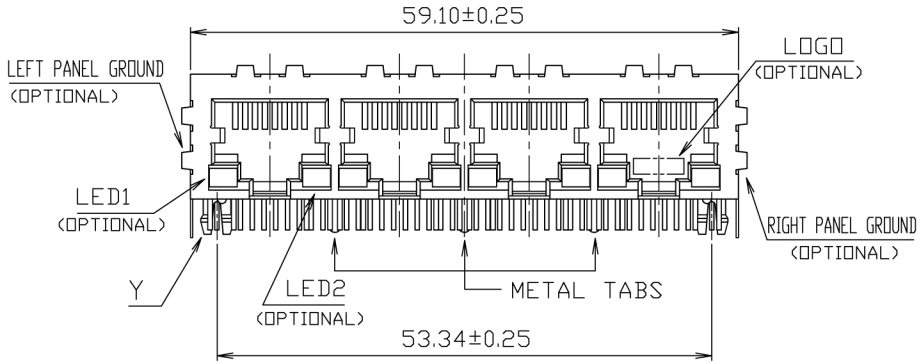


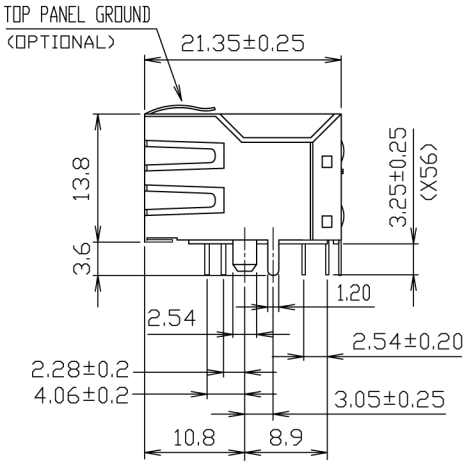


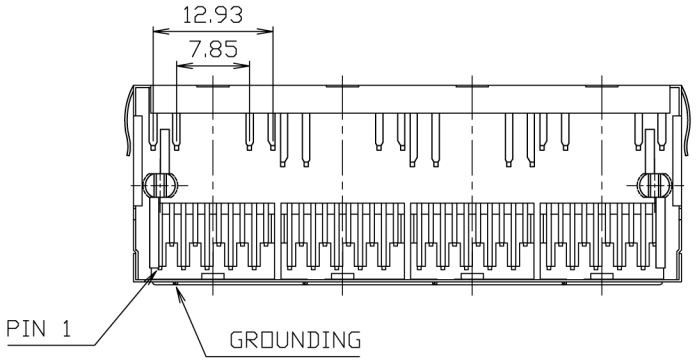


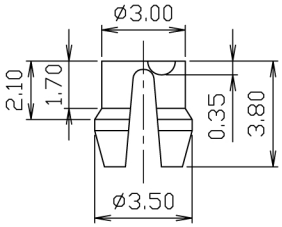


**DETAIL Y**

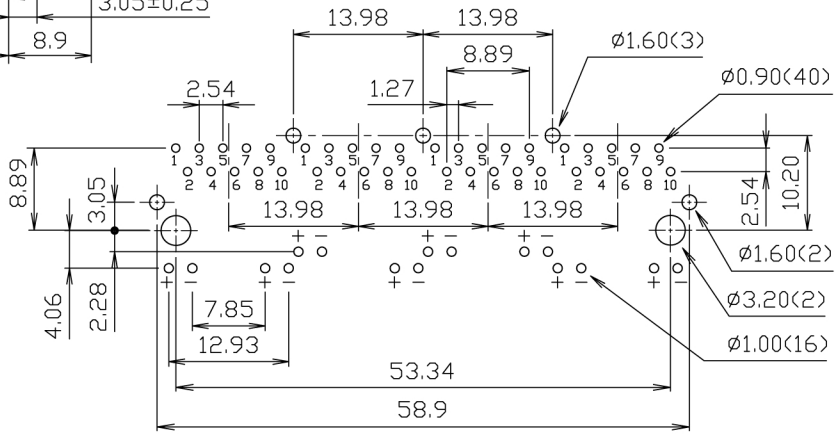


**PCB LAYOUT**

Ref.

| DO NOT SCALE DRAWING | TOLERANCES UNLESS OTHERWISE NOTED | INCH | MM | DR. CIAN.CI.LUO | DATE APR-09 '10 | E-YUNG ENTERPRISE CO., LTD. | | |
|---|---|---|---|---|---|---|---|---|
| THIRD ANGLE PROJECTION | LINEAR MM / INCH | 00 ± 000 ± 0000 ± | 0.0 ± 0.25 0.00 ± 0.20 0.000 ± 0.10 | CK'D M.CHANG | APR-09 '10 | TITLE 4PORTS, RJ45, SHIELDED, FLAT PIN WITH TRANSFORMER, SIDE ENTRY PCB JACK | | |
| MM INCH | ANGLE ± 0° 30' | RADII | + 0.40 − 0.15 | APP'D W.J.YANG | APR-09 '10 | SCALE SIZE DWG.NO. 980502 | REV. 1 | SHEET 1 |