TC-0240 SERIES

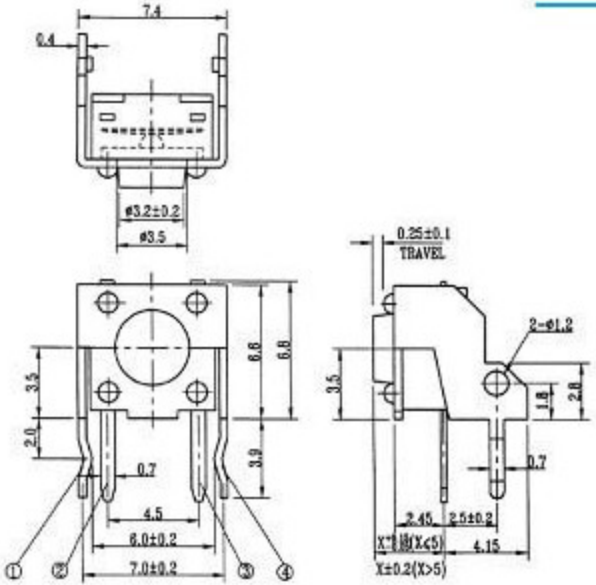

MODEL NO.	Stem length(mm)
TC-0240	3.15
TC-0241	3.85
TC-0242	5.85
TC-0243	8.35
TC-0244	6.85
TC-0245	11.35
TC-0246	6.15

CODE	OPERATING FORCE (gf)
T	100 ± 30
V	130 ± 30
X	160 ± 50
W	170 ± 50
Y	190 ± 50
Z	250 ± 100

CIRCUIT DIAGRAM

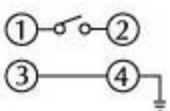

SPECIFICATIONS

1. RATING : DC 12V 50mA
2. TRAVEL : 0.25 ± 0.1mm
3. CONTACT RESISTANCE 100 mΩ MAX