REV.	DESCRIPTION	APPROVED BY	DATE	ECN NO.
A	RELEASE	Fido Weng	22/12/08'	ECN10134
B				
C				

CUSTOMER DRAWING

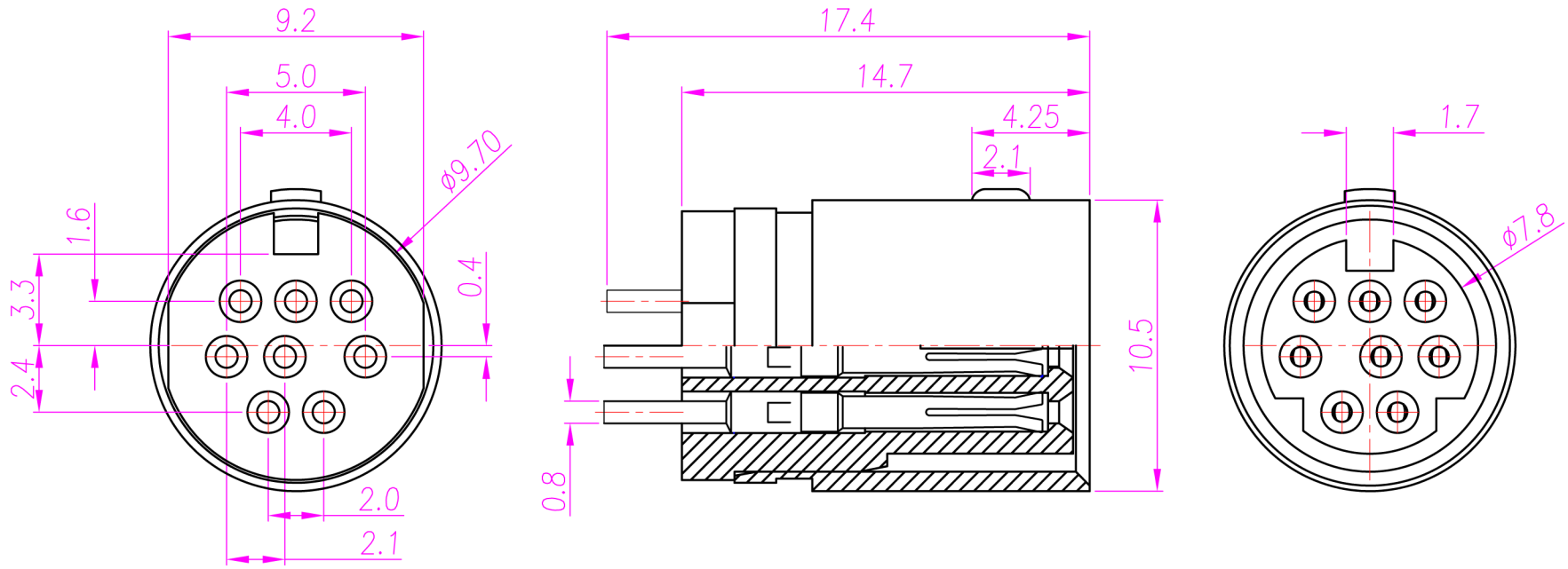

1. MATERIAL :
   1-1. HOUSING : PBT UL94V-0
   COLOR : BLACK
   1-2. CONTACT : PHOSPHOR BRONZE
   1-3. SHELL : BRASS
2. FINISH :
   2-1. CONTACT : GOLD FLASH
   UNDER PLATE : NICKEL
   2-2. SHELL : NICKEL PLATED OVER ALL

TABLE A

	MD-08F1-10	GOLD FLASH
	MD-08F1-09	GOLD 30u"
	MD-08F1-06	SILVER
	P/N	CONTACT PLATING

DRAWN	Jen Xie	APP'D	Emily Suen	UNIT	mm	TOLERANCE .x ±0.20 .xx ±0.10 .xxx ±0.05 .xxxx ±0.03 ANGULA ±1°		TITLE	MiniDin 8(F) 0.7厚 無彈片 系列		SHEET 1/1
CHK'D	Emily Suen			SCALE	1:1			PART NO.	SEE TABLE A	DWG NO. QC0155	VERSION A