REV.	DESCRIPTION	APPROVED BY	DATE	ECN NO.
A	RELEASE	Fido Weng	13/03/09'	
B				
C				

CUSTOMER DRAWING

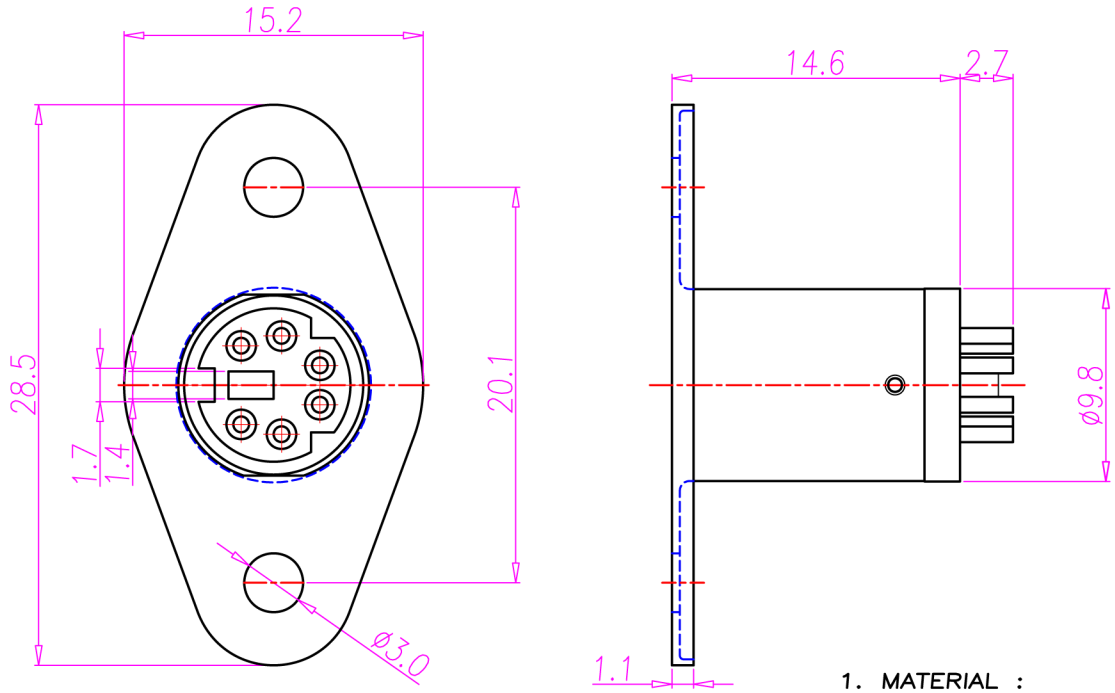

1. MATERIAL :
   - 1–1. HOUSING : PBT UL94V–0 ; COLOR : BLACK
   - 1–2. CONTACT : PHOSPHOR BRONZE
   - 1–3. SHELL : BRASS
   - 1–4. SPRING : PHOSPHOR BRONZE
2. FINISH :
   - 2–1. CONTACT : 60 MICRO INCHES MIN. SILVER PLATED UNDER PLATE : NICKEL
   - 2–2. SHELL : NICKEL PLATED 60u" ~ 100u" OVER ALL
   - 2–3. SPRING : 60 MICRO INCHES MIN. SILVER PLATED UNDER PLATE : NICKEL
3. ELECTRICAL SPECIFICATION :
   - 3–1. Rated current : 2A
   - 3–2. Voltage : 250V
4. Environmental :
   - 4–1. Operation Temperature : –20 ℃~85℃

DRAWN	KU	APP'D		UNIT	mm	TOLERANCE .x ±0.20 .xx ±0.10 .xxx ±0.05 .xxxx ±0.03 ANGULA ±1°		SOCKET 6PIN (F)		SHEET 1/1
CHK'D				SCALE	1:1			MD-06F1-01	DWG NO. QC0416	VERSION A