CUSTOMER DRAWING

REV.	DESCRIPTION	APPROVED BY	DATE	ECN NO.
A	RELEASE	Fido Weng	30/04/09'	
B				
C				

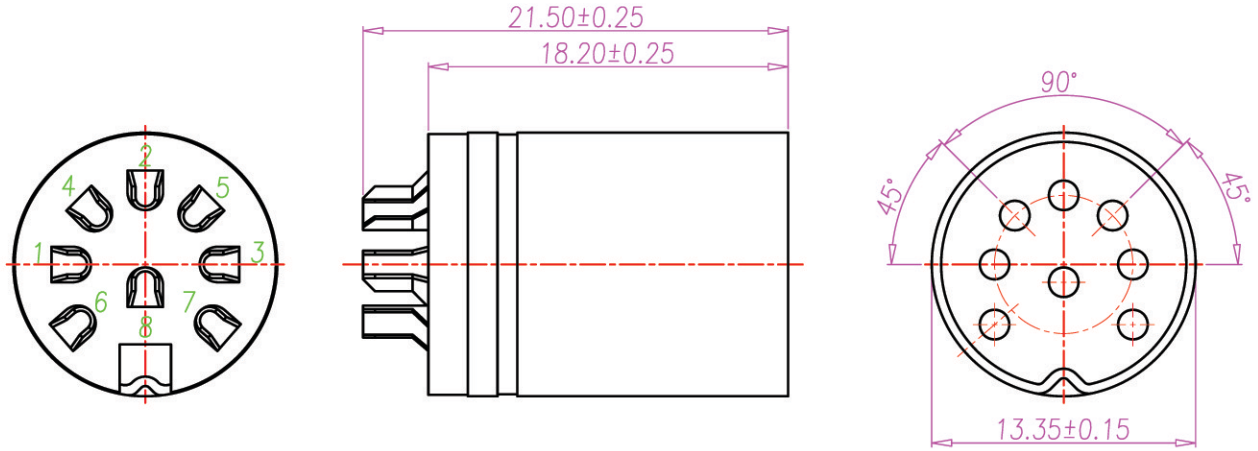

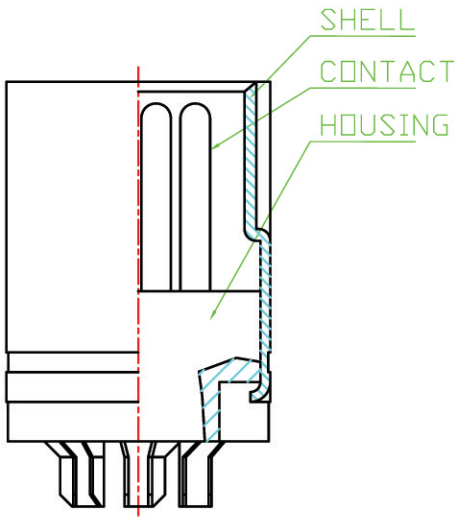

1. MATERIAL :
   1-1. HOUSING : PBT UL94V-0 ; COLOR : BLACK
   1-2. CONTACT : BRASS
   1-3. SHELL : BRASS
2. FINISH :
   2-1. CONTACT : NICKEL PLATED 60u" ~ 100u" OVER ALL
   2-2. SHELL : NICKEL PLATED 60u" ~ 100u" OVER ALL
3. ELECTRICAL SPECIFICATION :
   3-1. Rated current : 2A
   3-2. Rated Voltage :DC 12V
4. Environmental :
   4-1. Operation Temperature : -20℃~85℃

DRAWN	KU	APPEND		UNIT	MM	TOLERANCE .x ±0.20 .xx ±0.10 .xxx ±0.05 .xxxx ±0.03 ANGULA ±1°		TITLE	DIN 8(M)成型式262°		SHEET
CHOKED				SCALE	1:1			PART NO.	DI-08M1-01	DWG NO. QC0065	VERSION A