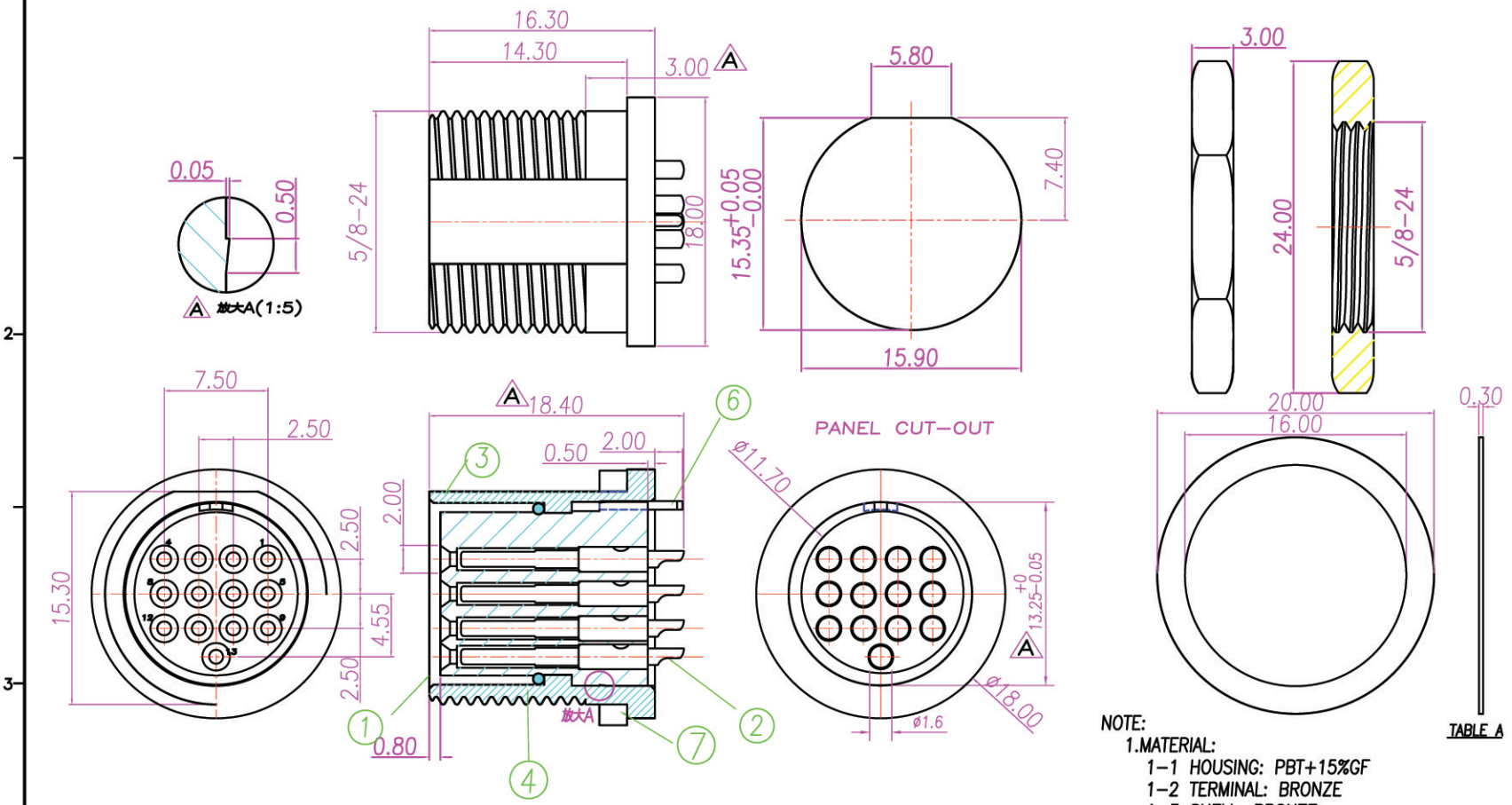

NOTE:

1.MATERIAL:

1-1 HOUSING: PBT+15%GF

1-2 TERMINAL: BRONZE

1-3 SHELL: BRONZE

2. PLATING:

2-1 TERMINAL:GOLD FLASH 1-3u"

2-2 SHEEL:NICKEL 50u"

Item	Description	PCS
1	Housing	1
2	Pin	13
3	Shell	1
4	O-Ring	1
5	O-Ring	1
6	接地	1
7	O-Ring	1

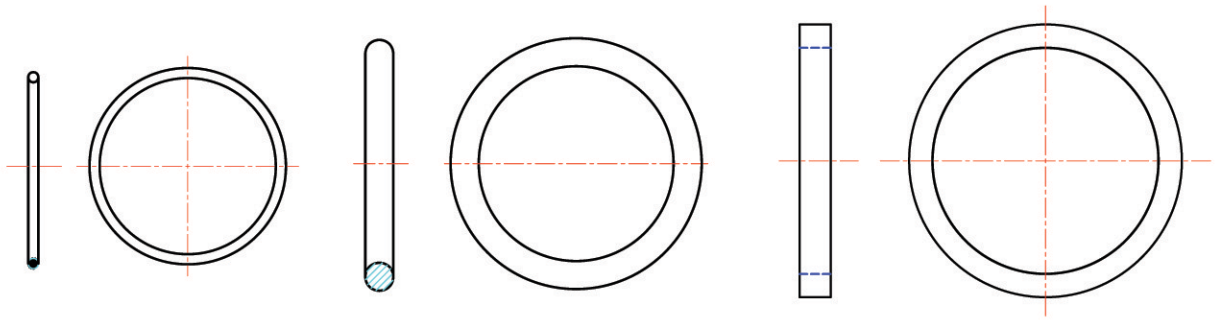

4 O-Ring(11.3*0.65)

5 O-Ring(12.5*1.8)

7 O-Ring(O-RING 14.5*17.5*2.0)

REV.	DESCRIPTION	CHANGE. BY	APPVL. BY	DATE
C				
B				
A	修改外觀尺寸	HULK	Stewart	05/05/08"

繪圖 DRAW. BY	HULK	日期 DATE	05/05/08"	單位 UNIT	mm	一般公差 .x ±0.25 .xx ±0.10	
審查 CHECK. BY	Jin	核准 APPVL. BY	Stewart	比例 SCALE	1:1		

品名 ITEM	DIN 13(F)防水噴鍍板式			SHEET 1/1
料號 PART NO.	WP-13F2-02	圖號 DWG NO.	QC2932	SIZE A4