REV.	DESCRIPTION	CHANGE BY	APPVL. BY	DATE

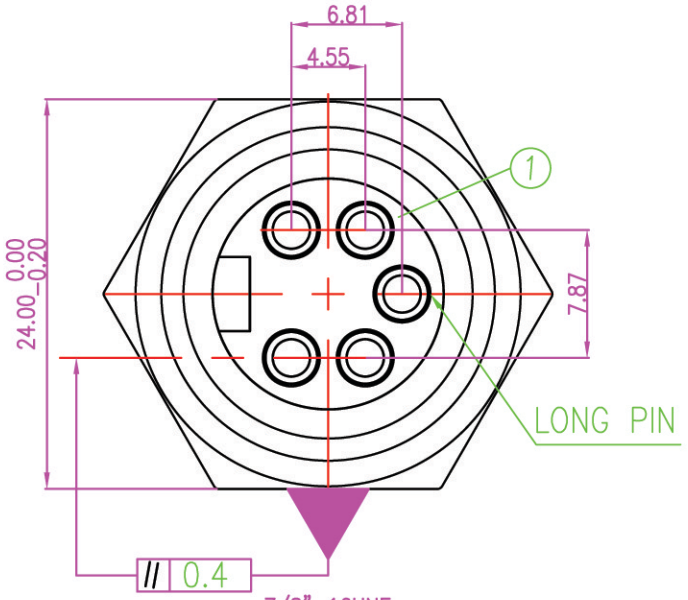

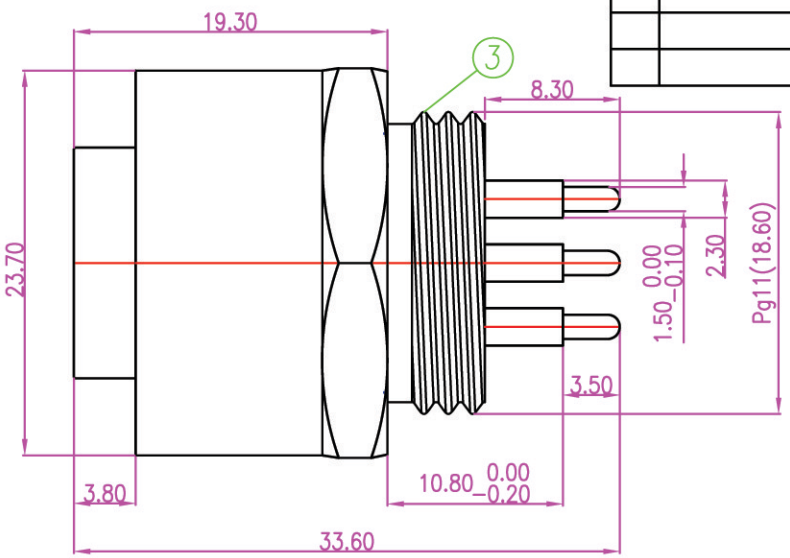

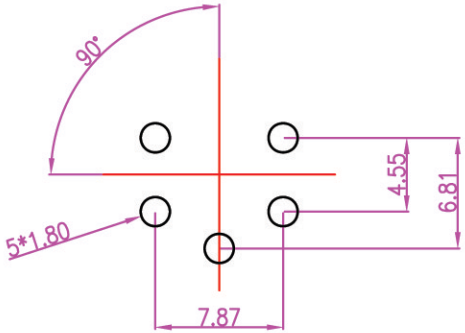

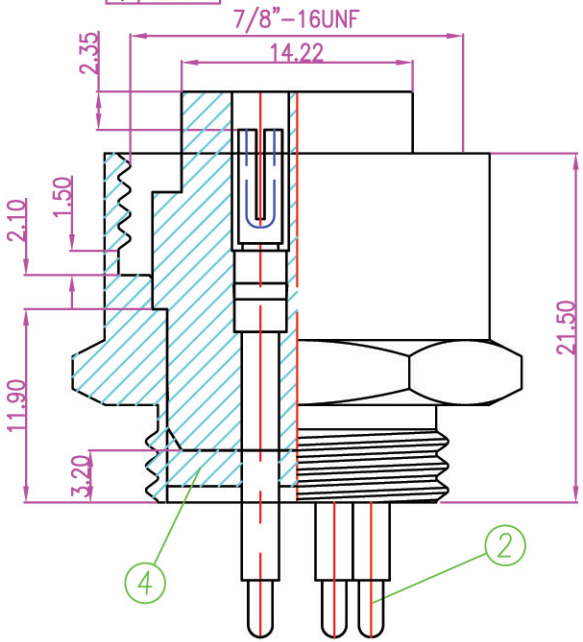

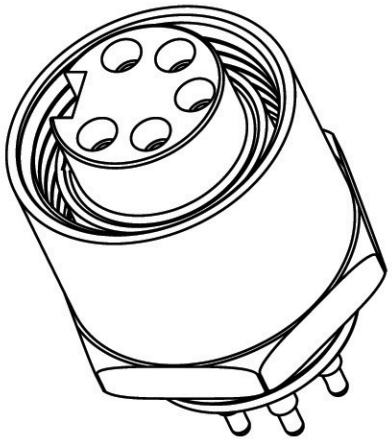

95776032

TABLE A

Item	Description	Material	UL File No.
1	Insulation	1403G6	E130155
2	Pin	JIS H3250 C3604 BD	
3	Shell	C3604	
4	YGLUE	5339A/B	E105126

1. MATERIAL
   INSULATION: THERMOPLASTIC UL94V−0
   COLOR: YELLOW.
   CONTACT: BRASS
   SHELL: BRASS
2. PLATING
   CONTACT: CONTACT PLATED 30u" GOLD,
   Shell:Nickel 100u"
3. SPECIFICATION
   CURRENT: 2 A.
   OPERATING TEMPERATURE: −20°C TO 105°C.
   INSULATION RESISTAMCE: 1000 MEGAOHMS MIN.
   DIELECTRIC STRENGTH: 500V AC MIN.

繪圖 DRAW. BY	WEI	日期 DATE	04/08/27	單位 UNIT	mm	一般公差 .x ±0.10 .xx ±0.05		品名 ITEM	Conn, Mini 5 pole, Female, Single DC Key, Internal Thread		SHEET 1/1
核准 APPVL. BY	Frank	版本 VERSION	ORIG.	比例 SCALE	1:1			料號 PART NO.	WP−05F2−12	圖號 DWG NO. NY1564	SIZE A4