REV.	DESCRIPTION	CHANGE BY	APPVL. BY	DATE

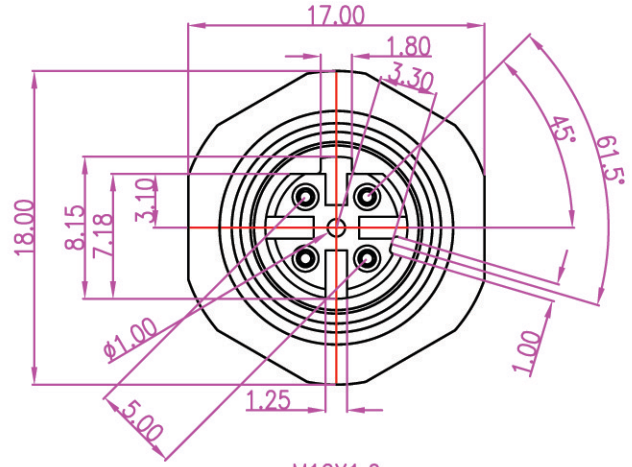

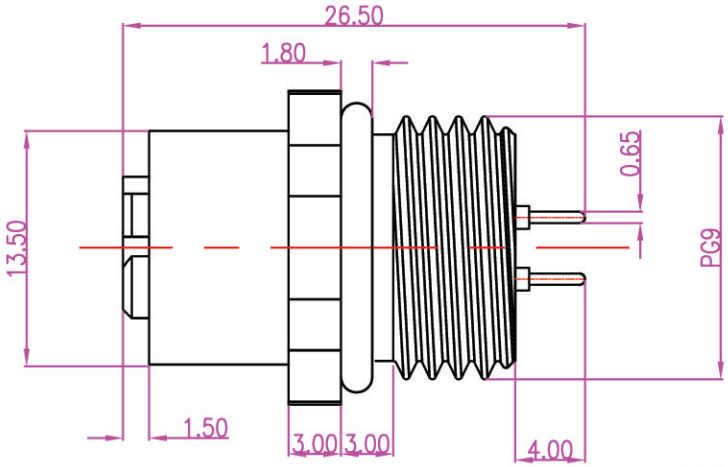

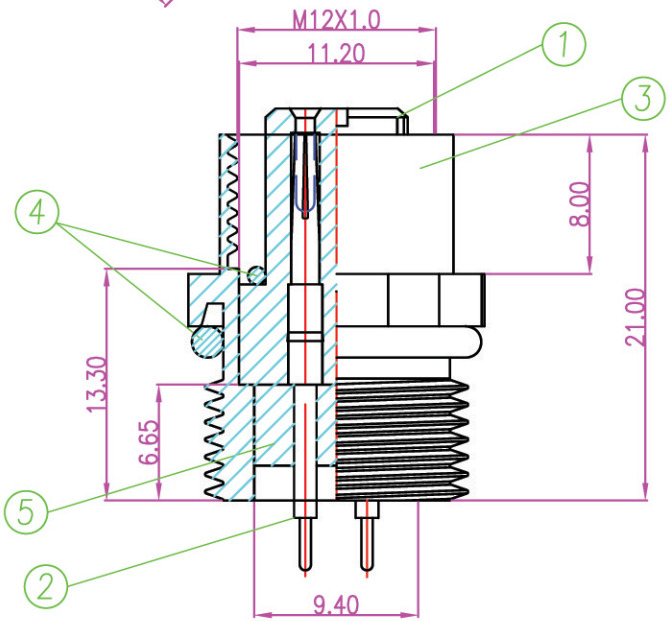

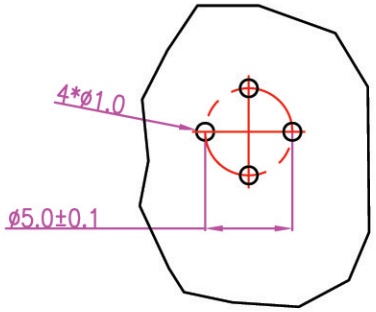

TABLE A

Item	Description	Material	UL File No.
1	Insulation	1403G6	E130155
2	Pin	JIS H3250 C3604 BD	
3	Shell	C3604	
4	O-Ring	NBR	
5	YGLUE	5339A/B	E105126

1. MATERIAL
   INSULATION: THERMOPLASTIC UL94V-0
   COLOR: BLACK.
   CONTACT: BRASS
   SHELL: BRASS
2. PLATING
   CONTACT: TABLE A
   Shell:NICKEL 100u"
3. SPECIFICATION
   CURRENT: 2 A.
   OPERATING TEMPERATURE: -20° C TO 105° C.
   INSULATION RESISTAMCE: 1000 MEGAOHMS MIN.
   DIELECTRIC STRENGTH: 500V AC MIN.

TABLE A

	WP-04F2-01	D-code 4P(F) conn(GOLD 30u")
	WP-04F2-02	D-code 4P(F) conn(GOLD 5u")
	P/N	DESCRIPTION

繪圖 DRAW. BY	WEI	日期 DATE	05/06/28	單位 UNIT	mm	一般公差 .x ±0.10 .xx ±0.05		品名 ITEM	D-code 4P(F) conn	SHEET
核准 APPVL. BY	Frank	版本 VERSION	ORIG.	比例 SCALE	1:1			料號 PART NO.	TABLE A	圖號 DWG NO. QC1868	SIZE