REV.	DESCRIPTION	APPROVED BY	DATE	ECN NO.
A	RELEASE	Fido Weng	28/04/09'	
B				
C				

CUSTOMER DRAWING

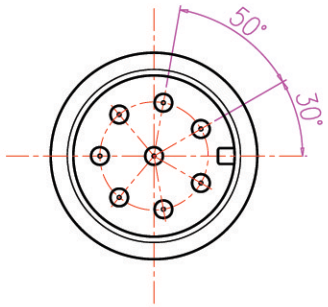

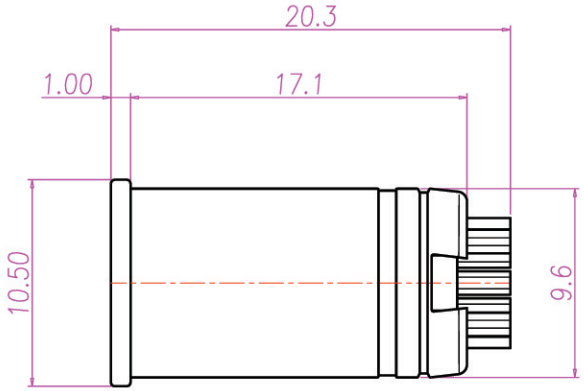

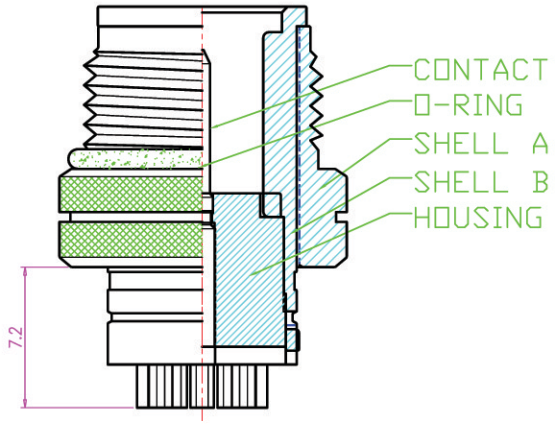

1. MATERIAL :
   - 1-1. HOUSING : PBT UL94V-0 ; COLOR : BLACK
   - 1-2. CONTACT : BRASS
   - 1-3. SHELL A : BRASS
   - 1-4. SHELL B : ZIAC ALLOY
   - 1-5. NUT : BRASS
   - 1-6. O-RING :NBR; COLOR : BLACK
2. FINISH :
   - 2-1. CONTACT : 10 MICRO INCHES MIN. GOLD PLATED UNDER PLATE : NICKEL
   - 2-2. SHELL A : NICKEL PLATED 60u" ~ 100u" OVER ALL
   - 2-3. SHELL B : NICKEL PLATED 60u" ~ 100u" OVER ALL
3. ELECTRICAL SPECIFICATION :
   - 3-1. Rated current : 5A
   - 3-2.Rated Voltage :125V
   - 3-3. Water proof: IPX8
4. Environmental :
   - 4-1. Operation Temperature : -20 ℃~85℃

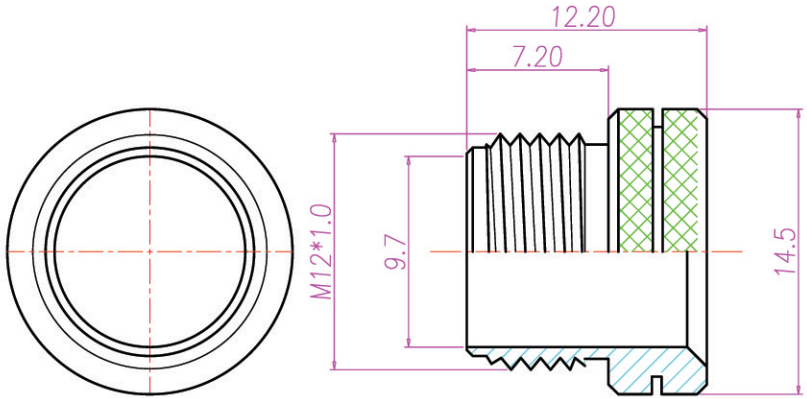

NUT

TABLE A

	料號	品名	電鍍
	WPM12-08M2-01	M12-8(M)防水頭	GOLD 10u"
	WPM12-08M2-02	M12-8(M)防水頭(端子表金)	GOLD FLISH

DRAWN	KU	APP'D		UNIT	MM	TOLERANCE .x ±0.20 .xx ±0.10 .xxx ±0.05 .xxxx ±0.03 ANGULA ±1°		TITLE	M12-8(公)防水頭		SHEET
CHK'D				SCALE	1:1			PART NO.	TABLE A	DWG NO. QC1408	VERSION A