REV.	DESCRIPTION	APPROVED BY	DATE	ECN NO.
A	RELEASE	Fido Weng	03/03/09'	ECN-09004
B				
C				

CUSTOMER DWAWING

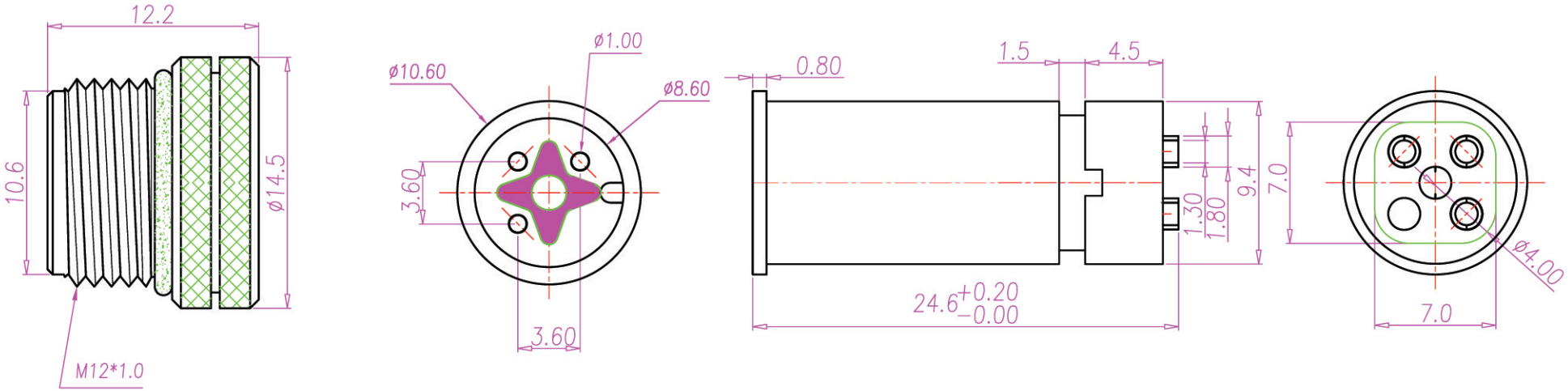

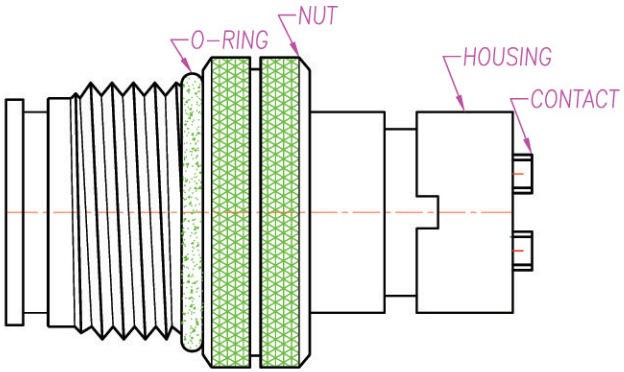

ASSEMBLY

1. MATERIAL :
   1-1. HOUSING :PBT UL94V-0;COLOR: BLACK
   1-2. CONTACT : BRASS
   1-3. NUT : BRASS
   1-4. O-RING :EPDM; COLOR : BLACK
2. FINISH :
   2-1. CONTACT A : 10 MICRO INCHES MIN. GOLD PLATED
   UNDER PLATE : NICKEL
   2-2. NUT : NICKEL PLATED 60u" ~ 100u" OVER ALL
3. ELECTRICAL SPECIFICATION :
   3-1. Rated current : 5A
   3-2. Voltage :125V
   3-3. Water proof: IPX7
4. Environmental :
   4-1. Operation Temperature : -20 ℃~85℃

DRAWN	Emily Suen	APP'D		UNIT	MM	TOLERANCE .x ±0.20 .xx ±0.10 .xxx ±0.05 .xxxx ±0.03 ANGULA ±1°		TITLE	M12-3(M)線端防水頭		SHEET
CHK'D				SCALE	1:1			PART NO.	WPM12-03M2-02	DWG NO. QC1463	VERSION A