REV.	DESCRIPTION	APPROVED BY	DATE	ECN NO.
A	RELEASE	Fido Weng	24/02/09'	
B				
C				

CUSTOMER DRAWING

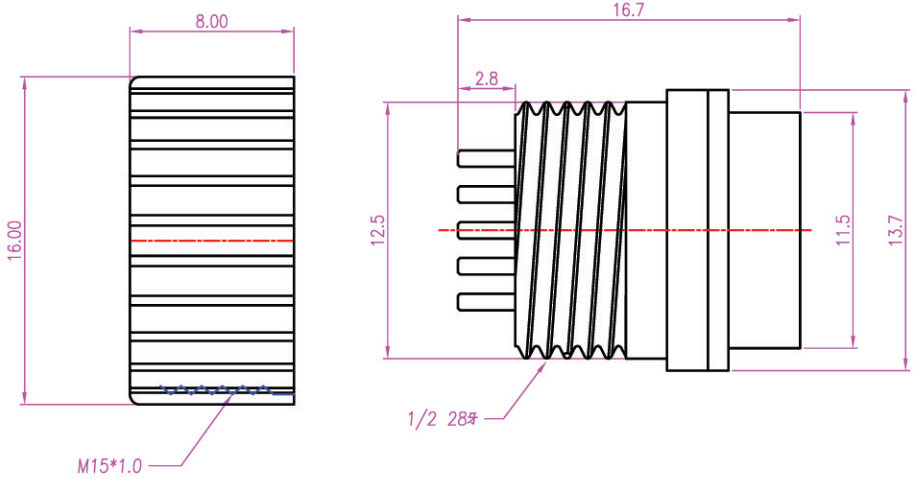

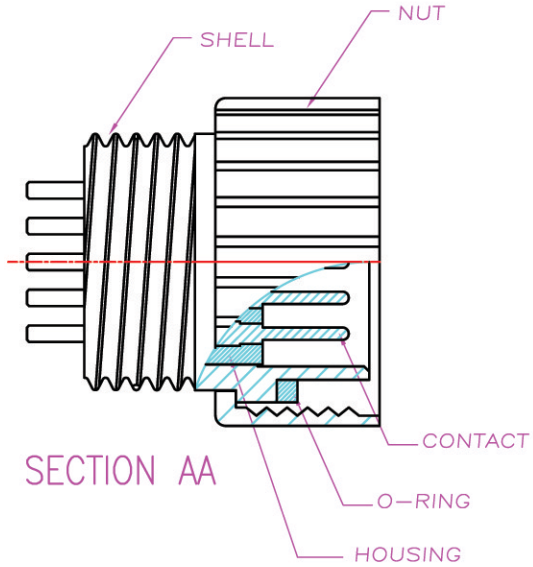

SECTION AA

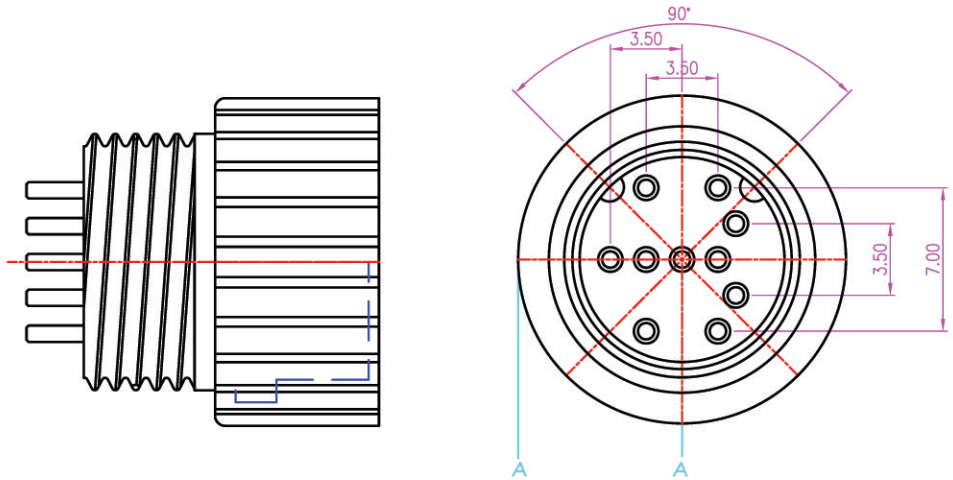

Assembly

NOTE

1. MATERIAL :
   - 1-1. HOUSING : PBT UL94V-0 ; COLOR : BLACK
   - 1-2. CONTACT : BRASS
   - 1-3. SHELL : ADC 12
   - 1-4. NUT : BRASS
   - 1-5. O-RING : NBR; COLOR : BLACK
2. FINISH :
   - 2-1. CONTACT A :GOLD FLASH PLATED
     UNDER PLATE : NICKEL
   - 2-2. SHELL : NICKEL PLATED 60u" ~ 100u" OVER ALL
   - 2-3.NUT : NICKEL PLATED 60u" ~ 100u" OVER ALL
3. ELECTRICAL SPECIFICATION :
   - 3-1. Rated current : 2A
   - 3-2. Voltage :30 V
   - 3-3. Water proof: IPX7
4. Environmental :
   - 4-1. Operation Temperature : -20 ℃~85℃

DRAWN	Hulk	APP'D		UNIT	mm	TOLERANCE .x ±0.20 .xx ±0.10 .xxx ±0.05 .xxxx ±0.03 ANGULA ±1°		TITLE	WP M15 10PIN(M) 線端焊線		SHEET 1
CHK'D				SCALE	1:1			PART NO.	WP-10M2-03	DWG NO. QC3861	VERSION A