REV.	DESCRIPTION	CHANGE BY	APPVL. BY	DATE
A				

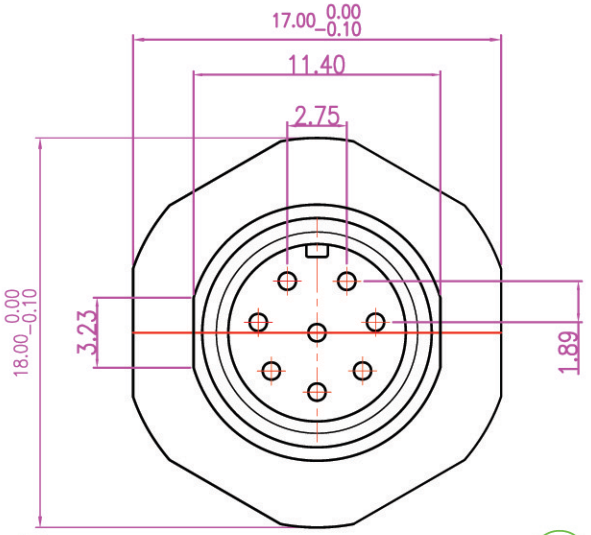

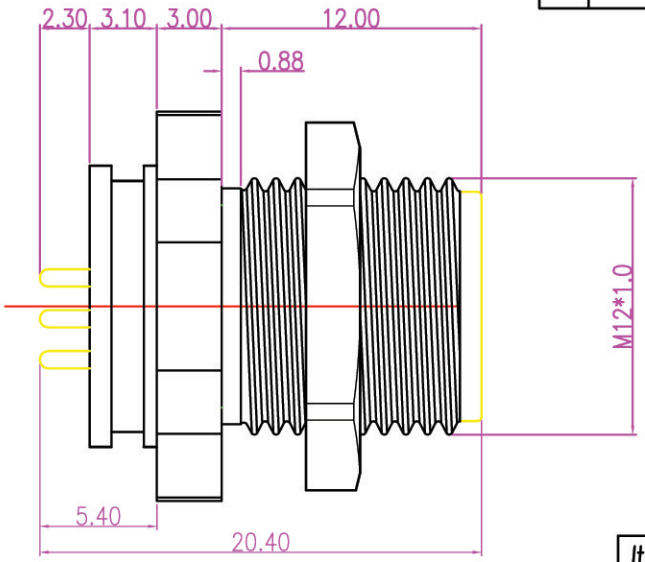

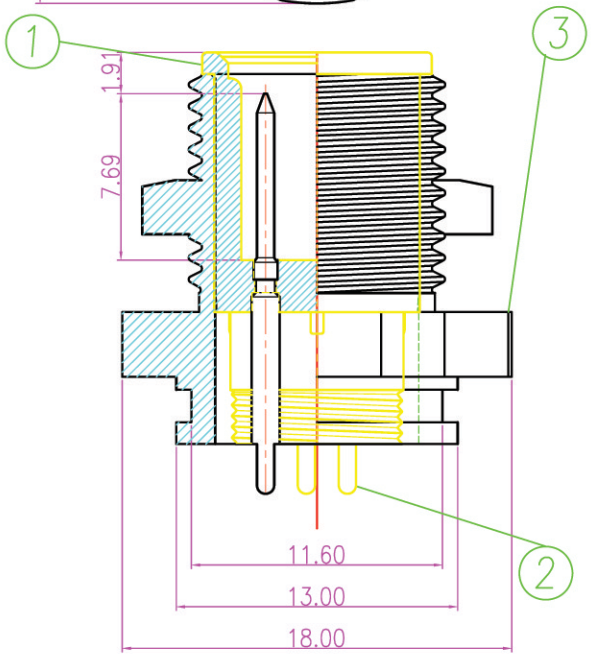

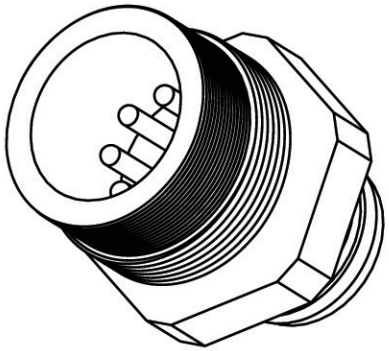

TABLE A

Item	Description	Material	UL File No.
1	Insulation	1403G6	E130155
2	Pin	JIS H3250 C3604 BD	
3	Shell	C3604	
4			
5			

1. MATERIAL
   INSULATION: THERMOPLASTIC UL94V-0
   COLOR: BLACK.
   CONTACT: BRASS
   SHELL: BRASS
2. PLATING
   CONTACT: CONTACT PLATED 10u" GOLD,
   Shell:NICKEL 100u"

繪圖 DRAW. BY	KU	日期 DATE	10/27/06"	單位 UNIT	mm	一般公差 .x 0.20 .xx 0.10		品名 ITEM	防水頭 8 PIN (M) 鎖板式 (DIP端子)	SHEET 1/1
核准 APPVL. BY	Frank	版本 VERSION	ORIG.	比例 SCALE	1:1			料號 PART NO.	WP-08M2-03	圖號 DWG NO. QC2694	SIZE A4