REV.	DESCRIPTION	APPROVED BY	DATE	ECN NO.
A	RELEASE	Fido Weng	08/04/09'	ECN09047
B				
C				

CUSTOMER DRAWING

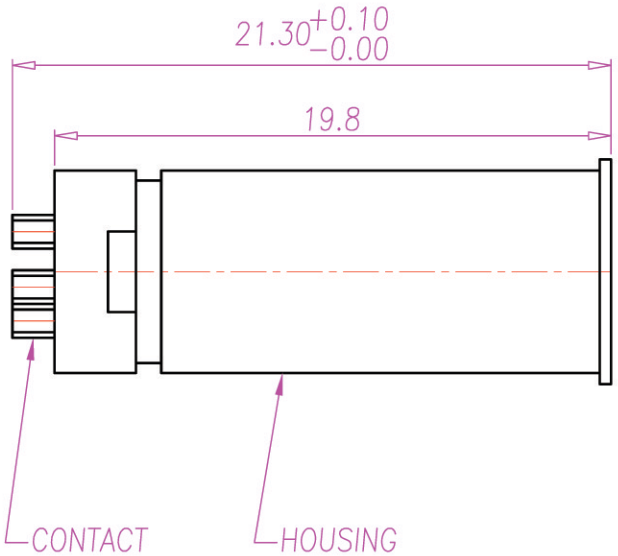

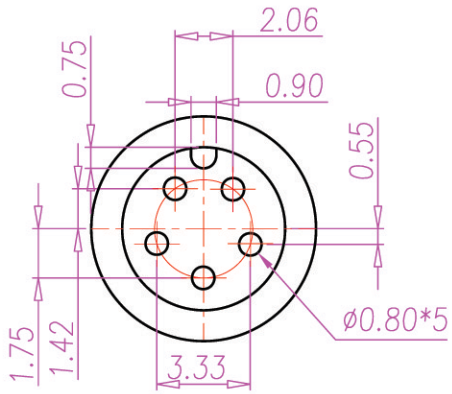

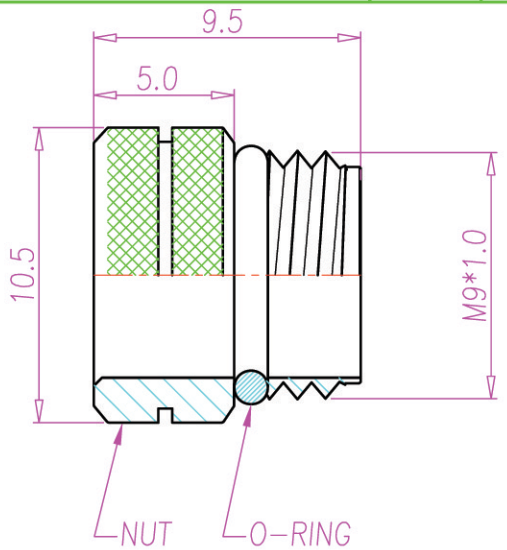

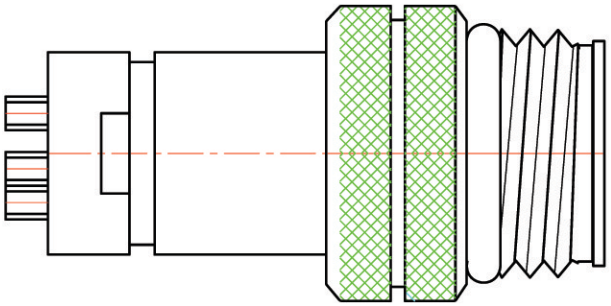

ASSEMBLY

1. MATERIAL :
   - 1-1. HOUSING : PBT UL94V-0 ; COLOR : BLACK
   - 1-2. CONTACT : BRASS
   - 1-3. O-RING :NBR; COLOR : BLACK
   - 1-4. NUT : BRASS
2. FINISH :
   - 2-1. CONTACT : 10 MICRO INCHES MIN. GOLD PLATED
     UNDER PLATE : NICKEL
   - 2-2. NUT : NICKEL PLATED 60u" ~ 100u" OVER ALL
3. ELECTRICAL SPECIFICATION :
   - 3-1. Rated current : 5A
   - 3-2. Voltage :125V
   - 3-3. Water proof: IPX7
4. Environmental :
   - 4-1. Operation Temperature : -40 ℃~85℃

DRAWN	Emily Suen	APP'D		UNIT	mm	TOLERANCE .x ±0.20 .xx ±0.10 .xxx ±0.05 .xxxx ±0.03 ANGULA ±1°		TITLE	M9-5PIN(M)線端		SHEET
CHK'D				SCALE	1:1			PART NO.	WP-05M2-26	DWG NO. QC3624	VERSION A