REV.	DESCRIPTION	CHANGE BY	APPVL. BY	DATE

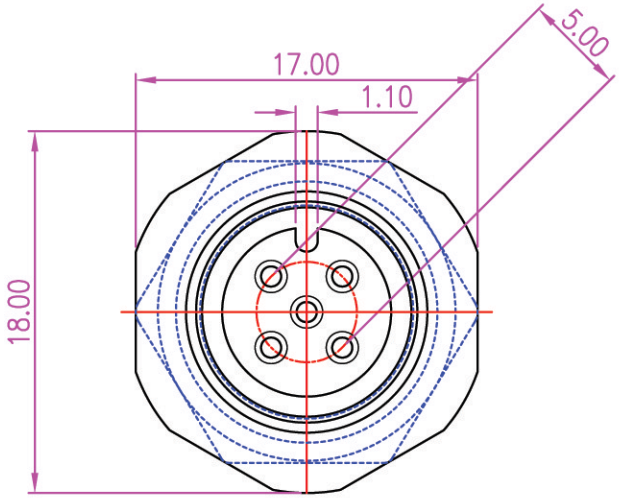

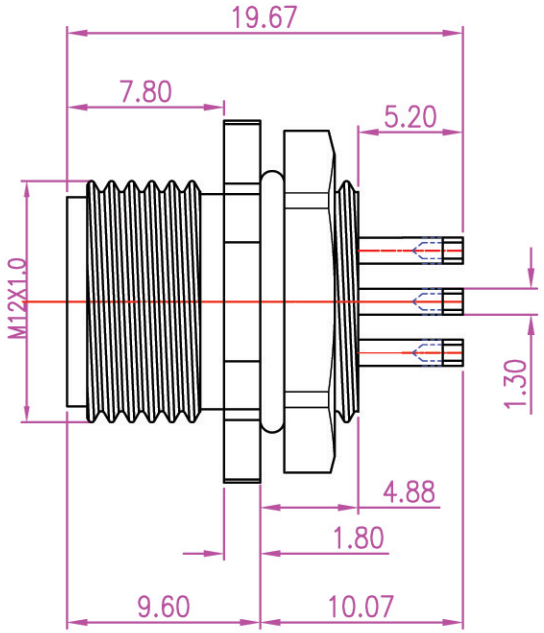

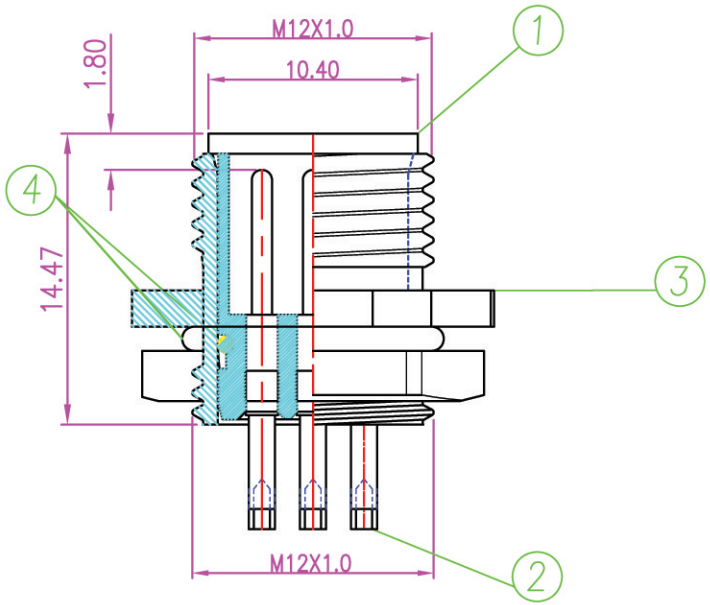

TABLE A

Item	Description	Material	UL File No.
1	Insulation	1403G6	E130155
2	Pin	JIS H3250 C3604 BD	
3	Shell	C3604	
4	O-Ring	NBR	

1. MATERIAL
   INSULATION: THERMOPLASTIC UL94V-0
   COLOR: BLACK.
   CONTACT: BRASS
   SHELL: BRASS
2. PLATING
   CONTACT: CONTACT PLATED NI 60u"
   Shell:NICKEL 100u"
3. SPECIFICATION
   CURRENT: 2 A.
   OPERATING TEMPERATURE: -20° C TO 105° C.
   INSULATION RESISTAMCE: 1000 MEGAOHMS MIN.
   DIELECTRIC STRENGTH: 500V AC MIN.

繪圖 DRAW. BY	KU	日期 DATE	06/28/06"	單位 UNIT	mm	一般公差 .x ±0.25 .xx ±0.10		品名 ITEM	防水頭 5PIN(F)雙邊M12*1.0		SHEET 1/1
校准 APPVL. BY	Frank	版本 VERSION	ORING	比例 SCALE	1:1			料號 PART NO.	WP-05M2-12	圖號 DWG NO. QC2303	SIZE A4